DOCID: 3927957

Approved for release by NSA on 11-29-2011, Transparency Case# 63852

An Analysis of Thin Film Germanium Epitaxially Deposited onto Calcium Fluoride

BY ARNOLD L. PUNDSACK

Unclassified

An experimental investigation of the formation conditions of thin film Ge epitaxially deposited onto (111) surfaces of CaF_2 and the resultant physical and electrical character is presented. The amorphous to crystalline transition region was found to be between 320° and 400°C, and the best single-crystal orientation was found between 550° and 575°C. Average values of the mobility, conductivity, and the hole concentrations are also reported with an explanation of the problems encountered in their determination.

INTRODUCTION

The formation of single-crystal thin film Ge has been the subject of much recent interest. Sloope and Tiller[1] have presented the formation conditions for single-crystal Ge on various substrates and have also given an analysis of the resultant character of the Ge films. Little else has been reported of the physical character of Ge films and less has been reported of the electrical properties of thin film Ge.

This report presents the results of an experimental investigation of the formation of thin film Ge epitaxially deposited onto CaF_2 and an analysis of the physical and electrical character of the resultant Ge films. The purpose of this report is to add more data to the important and difficult to understand subject of epitaxy so that it may aid in the better understanding of this process.

EXPERIMENTAL

The Ge films were prepared by vacuum deposition onto heated single-crystal surfaces of CaF_2. The CaF_2 substrates were freshly cleaved with the (111) face being the surface of condensation. Thirty ohm-cm polycrystalline Ge was the source material and was resistance heated in a carbon crucible to evaporation temperatures. The deposition rate was held constant throughout the experiment and was established by controlling the current through the crucible and measuring the resultant thickness using the Fizeau multiple-beam interference technique. The deposition rate of 1000A per min could be reproduced with a maximum error of 10%. The substance was heated by being supported in the center of a Joule heated Al_2O_3 cylinder, and the

DOCID: 3927957

substrate temperature was then determined with a chromel-alumel thermocouple touching the back of the substrate.

The films were analyzed using electron transmission diffraction, electron reflection diffraction, electron microscopy, x-ray diffraction, and optical microscopy.

All of the films were prepared by heating the substrate to the desired temperature, Ge was deposited at the desired rate, and the film was cooled to room temperature before removal from the vacuum system. Two films were prepared simultaneously; one was deposited through a mask for use on the electrical measurements, and the other was used for the analysis of the structural properties. Samples for electron transmission analysis were obtained by using a 35% solution of HCl to remove the film from the substrate. The films were all prepared in a vacuum of 1 to 8 $\times 10^{-5}$ Torr at a source-to-substrated istance of 13 cm and a deposition rate of 1000A per min.

RESULTS

The effect of varying the substrate temperature can be seen in Fig. 1 and Fig. 2. In Fig. 1 electron transmission diffraction patterns are shown with substrate temperature varying from 20° to 700°C, and Fig. 2 shows the corresponding electron micrographs for the same substrate temperatures. None of the films formed below 320°C were crystalline, and all of the films changed from amorphous to crystalline in the 320° to 400°C region. Single crystal films were produced between 500° and 600°C and, in particular, the best single-crystal films were produced at subtstrate temperatures of 550° to 575°C. It is interesting that the use of 99.99% purity Ge as the source gives approximately the same amorphous to crystalline transition region as that reported by Sloope and Tiller[1], using 99.99% purity Ge, and that reported by Dunoyer[2] as determined from electrical conductance. The temperature region reported herein for best single-crystal orientation is in close agreement with the values reported by Marucchi and Nifontoff[3] and those reported by Via and Thun[4] for epitaxial deposition onto heated surfaces of CaF_2. Fig. 2 also shows the rapid change in the microstructure at temperatures above 400°C as previously reported by Sloope and Tiller[1].

While the crystalline structure and microstructure showed some definable order, the electrical properties of these thin films of Ge did not exhibit such a property. The conductivity measurements showed the maximum deviation to have occurred with Ge films formed at identical conditions and of the same thickness, varying up to 30% in conductivities. This phenomenon is probably due to the cleavage steps on the substrate and the irregularities present in the film. It

was also found that, by moving the probes close together, varying values of conductivity could be computed for the same specimen with conductivity approaching a maximum value of 30 per ohm-cm. This is probably explained by the inclusion of irregularities (more or less) in the measurement. Room temperature measurements of conductivity with a fixed probe spacing of 0.25 cm gave average values of conductivity between 10 and 15 per ohm-cm. The Hall coefficient, on the other hand, did not exhibit this radical deviation. Figure 3 shows schematically the circuit used in determining the Hall coefficient. All of the Ge films exhibited a transverse voltage without an applied field. This transverse voltage was several orders of magnitude greater than the Hall voltage, and thus it was necessary to use the variable resistors R_A and R_B to achieve null conditions without an applied magnetic field. The Hall coefficient (R_H) was computed from the following relationship:

$$R_H = V_H t \times 10^8 / I H \text{ cm}^3 \text{ per coulomb}$$

where V_H is the HALL voltage, t is the thickness in Angstroms, I is the current in amperes, and H is the magnetic field in gauss. Other relationships used in determining the electrical properties of the Ge films are as follows: hole concentration (P_v) equals $3\pi/8eR_H$; holes per cm^3, and hole mobility (μp) equals $8R_H\sigma/3\pi$ cm^2 per volt-sec.

The average values of these electrical properties as determined from the use of the above relationships were: Hall coefficients of 6 to 12 cm^3 per coulomb, hole concentrations of 6 $\times 10^{17}$ to 10^{18} holes per cm^3, and hole mobilities of 50 to 150 cm^2 per volt-sec. It should be pointed out that these values are to be considered only approximate values because the scattering factor ($3\pi/8$) assumes weak magnetic fields and scattering due only to lattice vibrations. Lattice vibrations are not necessarily the only type of scattering present in thin films of Ge, and there may be inhomogeneities present in the film. In the determination of the electrical properties, the maximum current used was 10ma and the maximum applied magnetic field used was six kilogauss. All of the films were p-type and were ohmic in nature up to currents of 10ma. It is interesting to note that the use of polycrystalline Ge as the source in this case should give the same conductivity type as that reported using intrinsic Ge as the source.

While wide variations were found in the measurement of the conductivity of films formed under identical conditions, in general the Hall coefficient seemed to increase with increasing thickness. Also when a particular probe spacing was selected, a maximum of 3% change in the conductivity was noticed over the period of a month.

DOCID: 3927957

DISCUSSION

Several authors have presented the formation conditions for attaining single-crystal Ge films, and the technique is rather straightforward. To have a film with specific properties is more difficult. In particular, to predict with any reasonable degree of accuracy the electrical properties from the formation conditions is impossible. The values of the electrical properties presented herein are to be considered only approximate values because of the nature of the beast to defy any definable order. In summary, it is hoped that the listing of average electrical properties and some of the problems encountered in their determination along with the formation conditions may aid in the better understanding of the epitaxy process.

ACKNOWLEDGEMENTS

The author is indebted to Sp/5 J. F. Cornelius for the preparation of many of the films, and to Mr. J. R. Dorsey for assistance in the analysis of the physical properties of the films.

REFERENCES

1. B. W. Sloope and C. O. Tiller, *Journal of Applied Physics*, Vol. XXXIII, 1962, p. 3458.
2. J. M. Dunoyer, *ibid.*, Vol. XI, 1956, p. 460.
3. J. Marucchi and N. Nifontoff, *Comptes rendues hebdomedaires des Séances de l'Academie de Science*, Vol. CCXLIX, 1959, p. 435.
4. G. G. Via and R. E. Thun, *Transactions of the National Symposium on Vacuum Technology*, Vol. VIII, 1962, p. 850.

DOCID: 3927957

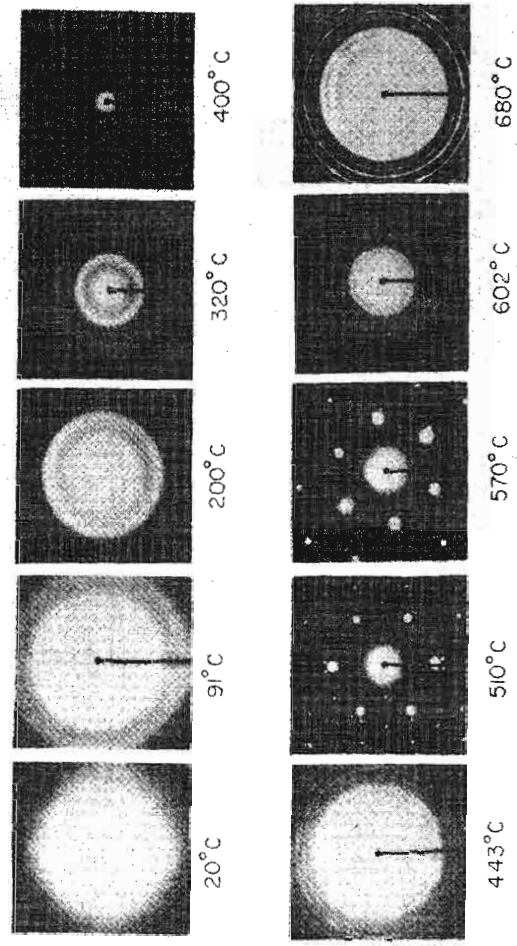

Fig. 1.—Electron Diffraction Patterns of Ge Films Deposited on CaF_2 with Substrate Temperature Varying from 20° to 700°C.

DOCID: 3927957

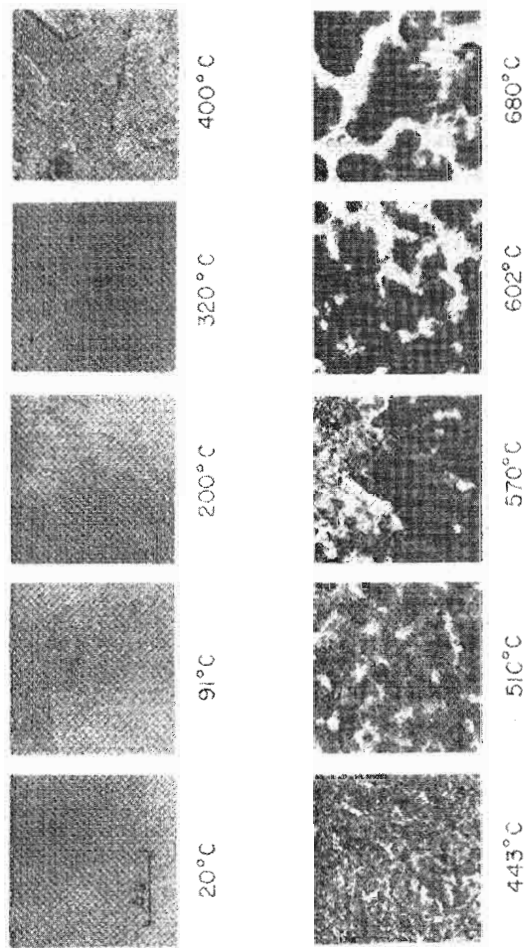

Fig. 2. Electron Micrographs of Ge Films Deposited on CaF_2 Showing the Change in Microstructure as a Function of the Substrate Temperature.

DOCID: 3927957

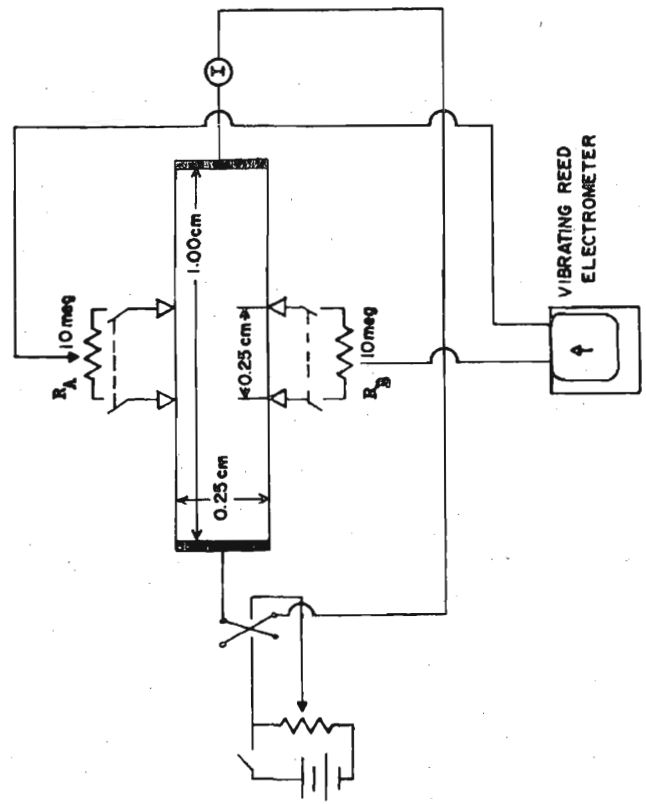

Fig. 3.—Schematic Diagram of the Hall Measuring Circuit.