REF ID:A67845

Patented Oct. 22, 1929 1,732,488

UNITED STATES PATENT OFFICE

MILTON H SHOENBERG AND LESTER SCHON, OF SAN FRANCISCO, CALIFORNIA, SAID SCHON ASSIGNOR TO SAID SHOENBERG

LIGHT-FLASHING SYSTEM

Application filed September 29, 1926 Serial No 138,497

This invention relates generally to systems for flashing a number of different light circuits and has special application as a decoration for Christmas trees

For decorating Christmas trees or other such objects with strings of electric lights a pleasing effect may be secured by repeatedly flashing the lights. We have found that this effect may be augmented by having the lights flash during different periods rather than in synchronism so that the tree affords a twinkling appearance Such devices must be capable of ready installation by persons unfamiliar with electrical circuits and must be simple in construction to permit manufacturing in large quantities

It is an object of this invention to devise an electric light string for decoration purposes comprising a plurality of separately controlled lamp circuits

It is a further object of this invention to devise an electric light string in the form of a portable unit which may be attached to any standard lamp socket, the unit having interrupter elements for separately controlling a number of light circuits

It is another object of this invention to devise a lighting system comprising a plurality of light circuits controlled by a common switch means whereby certain lights may be either repeatedly flashed or burned steadily

Further objects of this invention will appear from the following description in which we have set forth the preferred embodiment of our invention It is to be understood that the invention is to be accorded a range of mechanical equivalents consistent with the prior art

Referring to the drawings

Figure 1 is an assembly illustrating the manner in which the light string of this invention is made up as a portable unit which may be attached to any standard lamp socket

Fig 2 is a cross sectional view taken along the line 2—2 of Fig 3

Fig 3 is a plan view of the mounting for the interrupter element with the enclosing cover removed

Figure 4 is a plan view of one of the circuit interrupter elements

Figure 5 is a cross sectional view taken along the line 5—5 of Figure 4

Figure 6 is a bottom plan view of the mounting for the interrupter elements showing the construction of the circuit controller switch

Figure 7 is a circuit diagram showing the manner in which different light circuits are connected with the interrupter elements and the circuit controller

The invention comprises generally a plurality of lamp circuits which are adapted to be energized from a common source of current and are associated with a circuit controller which serves to independently flash the lamps of each circuit The circuit controller is also provided with switch means whereby one or a number of lamp circuits may be supplied with uninterrupted current to burn the lights steadily while the remainder of the circuits are permitted to flash The entire apparatus together with the circuit controller is constructed as a portable unit which may be installed by merely inserting a plug in a standard lamp socket

Referring first to the circuit diagram of Figure 7, the system has been illustrated as being provided with five separate lamp circuits which have been designated as 1 to 5 inclusive It is obvious however that any number of lamp circuits may be employed, depending upon the size of the object being decorated and upon the effect desired These lamp circuits are all energized by a common source of current such as the current supply lines 10 and are electrically associated with a circuit controller designated generally at 11 In practice each light circuit is electrically connected by means of a flexible electric cord whereby it may be conveniently draped over a Christmas tree or other object to be decorated Thus as shown in Figure 1, each light circuit has been shown as comprising one or more lamp sockets 13 electrically connected together by means of flexible cord 14 and to the circuit controller 11 by means of cord 15 The sockets are adapted to receive electric lamps 16 which may be of

Approved for Release by NSA on 09-05-2013 pursuant to E.O. 13526

REF ID:A67845

different colors to secure any desired effect The lamp sockets 13 may either be connected in series or in parallel depending upon the rated voltage of the lamps The circuit controller is shown as connected to a supply of current by means of a standard connection plug 17 which is connected with the controller as by means of flexible cord 18

Within the circuit controller 11 are mounted a number of circuit interrupter elements which are adapted to independently flash the lamps in each lamp circuit These interrupter elements have been designated in the drawings by numerals 21 to 25 inclusive and are shown as mounted in spaced relationship upon a disc 26 which is preferably made of insulating material Any suitable construction of interrupter elements may be employed, although to secure reliable operation it is preferable to employ interrupter elements such as shown in our copending application Serial Number 101 675 entitled "Circuit interrupter" Such an interrupter element has been shown in detail in Figs 4 and 5 and comprises a relatively flat metallic wafer 27 having a recess 28 offset from the center of the same Mounted on one face of this wafer so as to overlie the recess 28 is a bi-metallic strip 29 carrying a movable contact 30 Upon the other face of the wafer there is mounted a metallic spring contact strip 31 carrying a stationary contact 32 adapted to cooperate with movable contact 30 This spring strip 31 is insulated from the wafer 27 as by means of a sheet 33 of mica or other suitable material The bi-metallic element 29 is provided with a suitable heating resistance such as a resistance wire 34 which is wound about the metallic member and connected in shunt with contacts 30 and 32 This type of interrupter element is known as the shunt type although it is obvious that an interrupter element of the series type may be employed Electrical connections are made to this interrupter element by making electrical contact with the body of the metal wafer 27 and with the spring contact strip 31

The interrupter elements are secured in spaced relationship to the disc 27 by means of a metallic retainer 36 This retainer is provided with a number of pressed out flanges 37 adapted to surround and extend over the peripheral edge of each wafer 27 A plurality of integral projections 38 may be provided upon the wafer 27 to abut the flanges 37 and thus force the interrupter element into close contact against the face of the disc 26 and against the pressure of the spring contact strip 31 The retainer 37 serves to make common electrical connection to all of the wafers 27 of the interrupter elements while connection to the spring contact 31 is made by means of a plurality of contacts 39 shown in the form of eyelets extending through the disc 26

As will be presently described an interrupter element is associated with each light circuit so that the current in each circuit is separately interrupted Switch means has also been provided for short circuiting one or more of the circuit interrupter elements so that the lamps of one or more lamp circuits may be burned steadily while the remainder are permitted to flash This switch is preferably incorporated with the mounting for the interrupter elements The particular form of control switch shown comprises a movable contact member 41 preferably in the form of a disc carried upon the end of a rotatable member 42 which is screw threaded into the retainer 36 Rotation of member 42 is effected by means of the knob 43 whereby the disc 41 may be shifted relative to the mounting disc 26 Mounted in juxtaposition to the moving contact member 41 and electrically connected to the eyelets 39 are a plurality of resilient switch fingers 44, one switch finger being provided for each interrupter element The free ends of these fingers are located different distances from the moving contact member 41 so that as this moving contact is shifted by rotation of knob 43 it serves to contact successively with the different fingers As the moving contact member 41 is electrically connected with the retainer 37 by means of the threaded member 42, and as the fingers 44 are electrically connected with the eyelets 39 and the spring contact members 31 of each interrupter element, electrical connection between switch member 41 and any one of the fingers 44 serves to short circuit the contacts of the interrupter element associated with that finger

The electrical connections for the switching arrangement may be best understood by reference to Fig 7 Thus the retainer 36 has been indicated by the conductor 136 which serves to connect together the movable interrupter contacts One side of each light circuit is also connected together by means of conductor 46 and is also connected to the other side of the line The other side of each light circuit has been shown as connected to a switch finger 44 by means of conductors 51 to 55 respectively With the switch member 41 out of contact with all of the switch fingers 44, the interrupter elements 21 to 25 inclusive serve to repeatedly vary the current supplied to each light circuit 1 to 5 respectively Each element is preferably adjusted or constructed so as to operate at a different time period so that when in operation the lamps of a different circuit will not operate in synchronism If it is desired to burn a portion of the lamps steady and allow the remainder to flash, the operator operates knob 43 to bring switch member 41 into con-

REF ID:A67845

tact with say the nearest switch finger 44 which serves to shut out the contact of the interrupter element 21 thus causing an interrupted supply of current to flow in the lamps of circuit 1 but permits the other interrupter elements to flash the lamps of circuits 2 to 5 inclusive By further rotation of knob 43 two or more of the switch fingers may be brought into contact with the movable switch member 41 to cause the lamps of two or more circuits to burn steady and to permit the remainder to flash By turning the knob to the limit of its movement it may be made to shut out all of the interrupter elements and thus to cause all of the lamps to burn steadily

In practice it is preferable to inclose the circuit controller by means of a metallic casing comprising for example a metal cup-shaped member 57 having a cover portion 58 clipped over its rim, this cover portion being provided with a suitable aperture 59 through which the cords 15 and cord 18 extend An insulating lining 60 of fibre or other insulating material is provided within the interior of the cup-shaped portion 57 to prevent short circuiting of the retainer 36 upon the casing In order to limit movement of the knob 43 there is provided an insulating washer 61 between the upper face of the casing and the lower face of the knob

We claim

1 A decorative device for Christmas trees in the form of a portable unit comprising a plurality of lamp circuits supplied from a single source of current said circuits being formed by flexible conductor cord and each having a plurality of spaced lamps, a circuit interrupter electrically associated with each circuit for periodically varying the current supplied to the lamps, said interrupters each having different time periods, and a portable mounting for said interrupters

2 A decorative device for Christmas trees comprising a plurality of separate circuits supplied from a common source of current, each circuit comprising a substantial length of flexible cord supplying an electric lamp, and a controller associated with all of said circuits, said controller comprising a plurality of bimetallic circuit interrupters each connected to a separate circuit, each interrupter serving to repeatedly and independently vary current supplied to its respective circuit

3 A decorative device for Christmas trees comprising a plurality of separate circuits supplied from a common source of current, each circuit comprising a substantial length of flexible cord supplying an electric lamp, and a controller associated with all of said circuits, said controller comprising a plurality of bimetallic circuit interrupters each connected to a separate circuit, each interrupter serving to repeatedly and independently vary current supplied to its respective circuit, and a switch comprising a single member movable for rendering all of said interrupters inoperative whereby said lamps may burn steadily

4 A decorative device for Christmas trees comprising a controller box adapted to be connected to a supply of current, flexible conductor cords leading from said box and adapted to be draped over a Christmas tree, a plurality of spaced electric lamps electrically associated with said cords, thereby forming a plurality of separate lamp circuits, and a plurality of periodic circuit interrupters having different time periods disposed within said box and electrically associated severally with said lamp circuits whereby the current supplied to the lamps is irregularly varied

5 A decorative device for Christmas trees comprising a plurality of electric lamps, flexible conductor cord connecting said lamps and adapted for electrical connection with a source of current, said cord forming a plurality of separate lamp circuits, a bimetallic circuit interrupter electrically associated with each circuit for varying current supplied to its respective circuit substantially periodically, said interrupters having different timing periods whereby the device affords a varying irregular lighting effect

6 A decorative device for Christmas trees in the form of a portable unit comprising a plurality of lamp circuits, a plug connected to said circuits, said circuits being formed by flexible conductor cord and each including a plurality of spaced lamps, and means for periodically flashing the lamps of each circuit at different time periods to secure an irregular lighting effect.

7 A decorative device for Christmas trees in the form of a portable unit comprising a plurality of lamp circuits, a plug connected to said circuits, said circuits being formed by flexible conductor cord and each having a plurality of spaced lamps, and an interrupter element in each circuit for periodically flashing the lamps of its respective circuit, said elements having different time periods to secure a varying irregular illuminating effect

In testimony whereof, we have hereunto set our hands

MILTON H SHOENBERG
LESTER SCHON

REF ID:A67845

Oct. 22, 1929. M H SHOENBERG ET AL 1,732,488

LIGHT FLASHING SYSTEM

Filed Sept 29, 1926 2 Sheets-Sheet 1

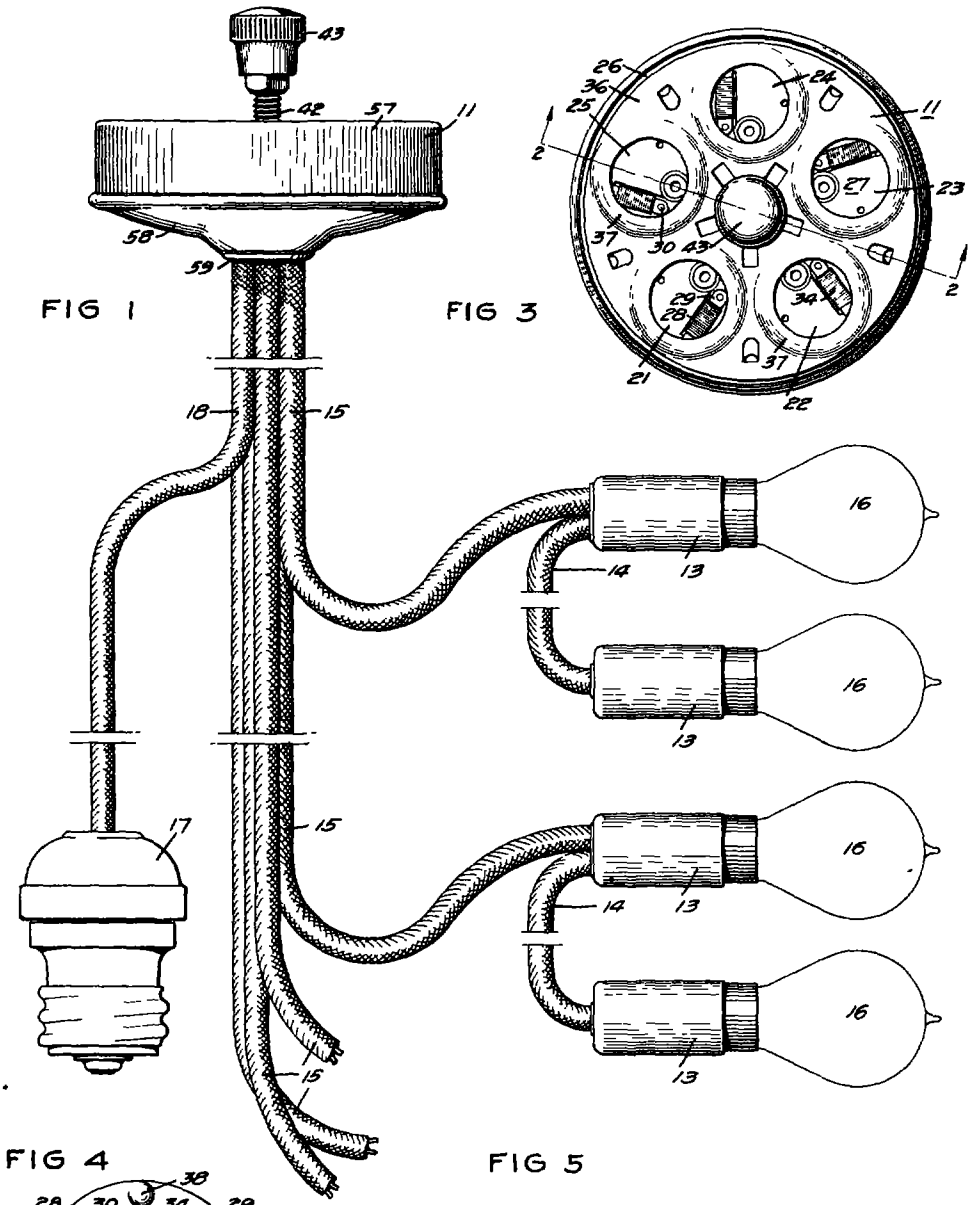

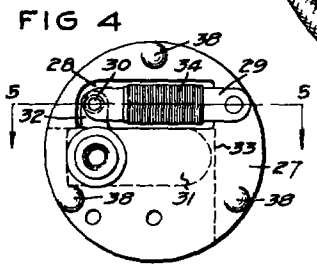

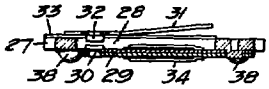

INVENTORS
Milton H Shoenberg
BY Lester Schon
White & Frost
Their ATTORNEYS

REF ID:A67845

Oct. 22, 1929. M. H. SHOENBERG ET AL 1,732,488

LIGHT FLASHING SYSTEM

Filed Sept 29, 1926 2 Sheets-Sheet 2

FIG 2

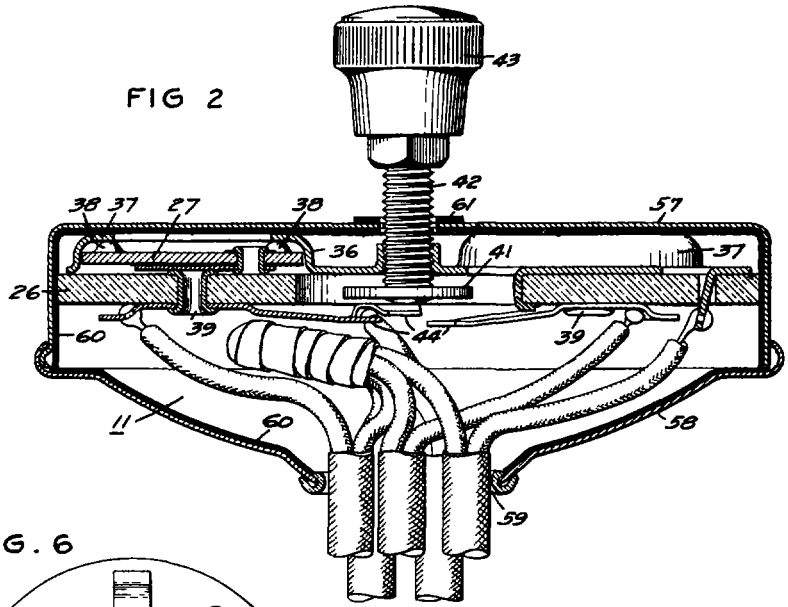

FIG. 6

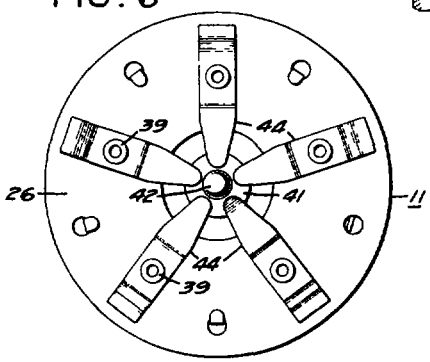

FIG 7

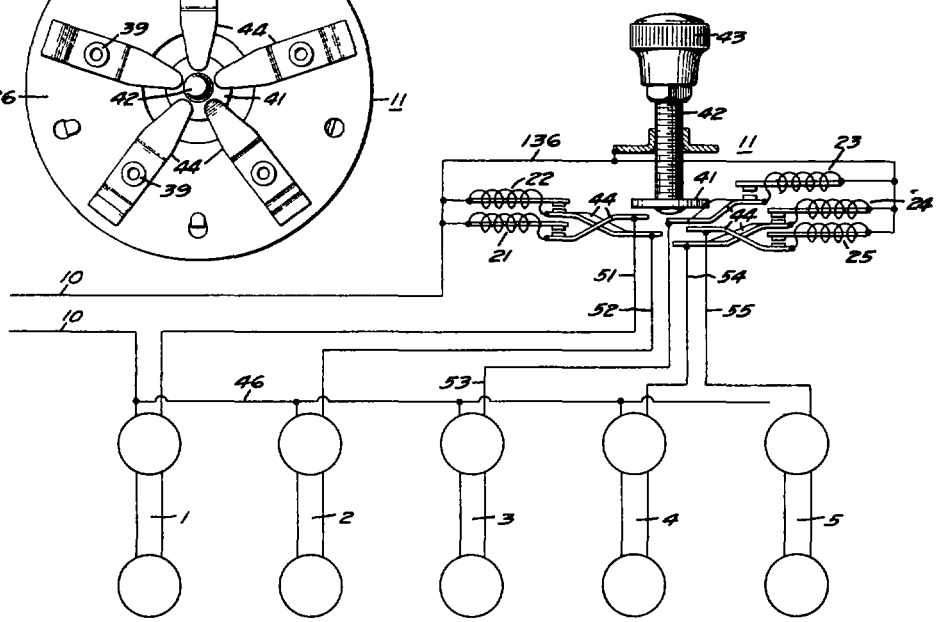

INVENTORS
Milton H Shoenberg
Lester Schon
BY White & Frost
Their ATTORNEYS